MALMO SHOWER DOOR INSTALLATION INSTRUCTIONS

Thank you for choosing our shower enclosure. Before installing, please read these instructions carefully and check if all accessories are available and if any damage occurred during shipping.

For any questions, please contact us directly.

SAFETY ISSUES

Glass is fragile, handle carefully and avoid hitting rigid objects. Place the glass against the wall in gradient with a soft underlay beneath. We strongly suggest a two-man carry when moving. Do not take off the angle protection until installing.

Wear safety shoes when carrying the glass.

Wear safety glasses when drilling.

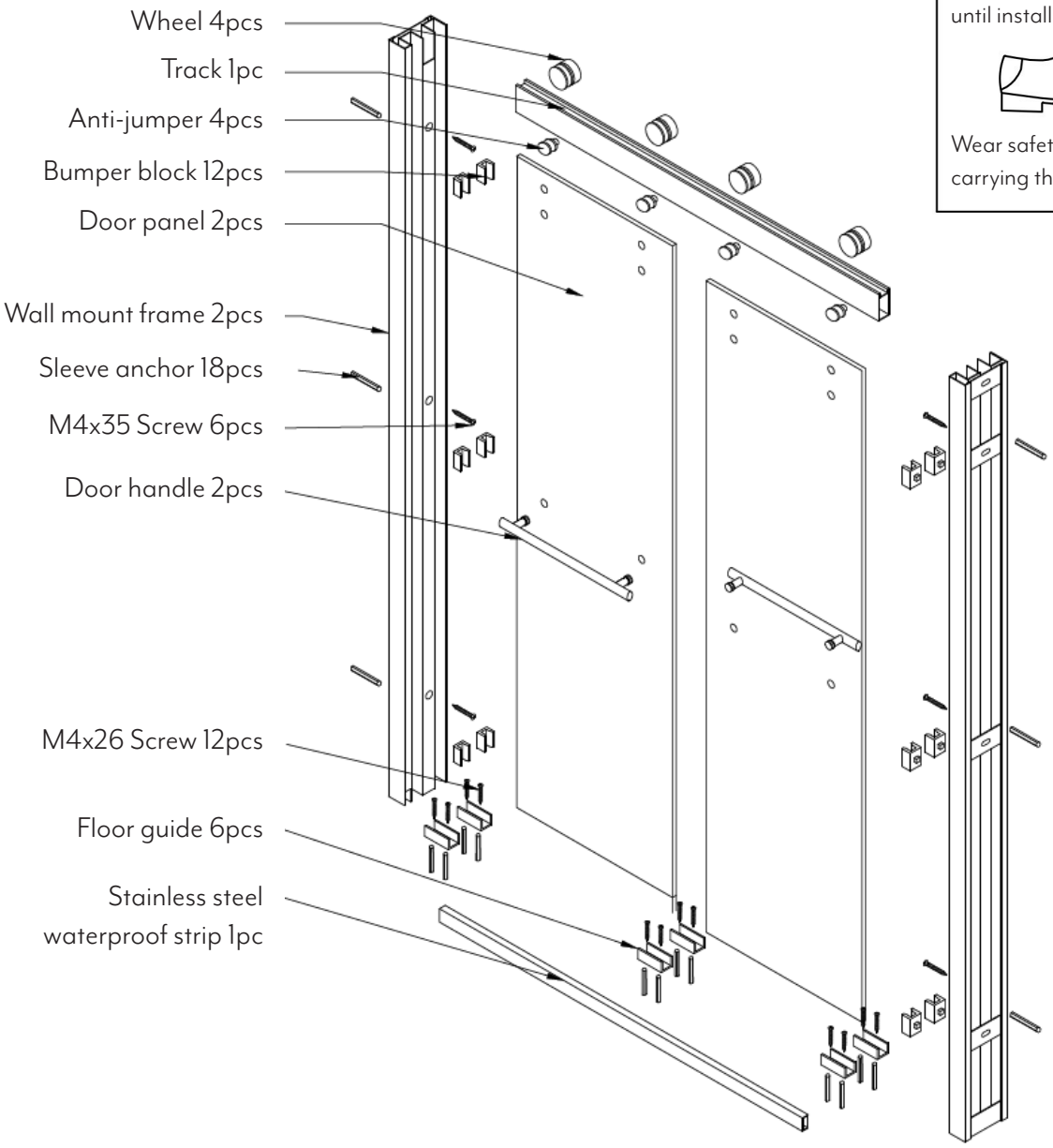

MERIDIEN HOUSE | 203 N. LEWIS ST. | LAGRANGE, GA 30240 USA
O: (706) 350-4300 F: (706) 350-4305 | WWW.MGROUPCORP.COM

MALMO SHOWER DOOR INSTALLATION INSTRUCTIONS

1

PRECAUTIONS

1. Clean the work stations and keep the floor dry.
2. To keep the floor dry during installation, do not turn on the faucet.
3. Glass is fragile, so make sure it will not hit any rigid object when installing or operating the door.
4. Wall blocking is required for mounting the side frame and track.
5. Before drilling, check and make sure no electrical wire or water pipes are hidden in the wall.
6. After installation, collect all of the tools and clean the work station.

2

INSTALLATION & ADJUSTING

1. Place the stone base in the right position.
2. Check the stone base with a level, adjusting the stone horizontal level by increasing gasket or repairing the stone base.

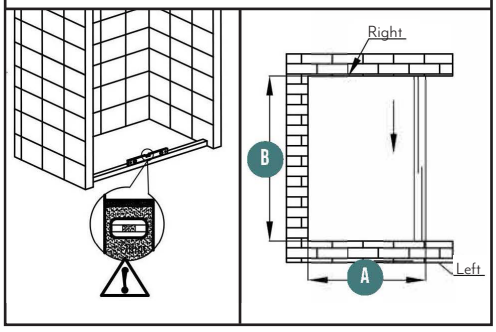

3

Place stainless steel waterproof strip 6mm away from the edge of shower pan.

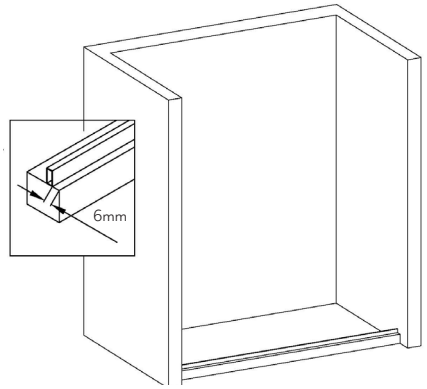

4

Install the wall mount frame.

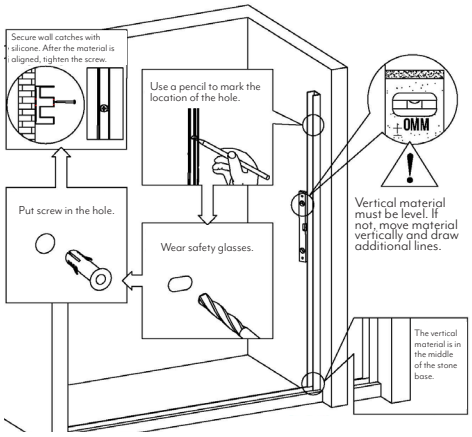

5

Install the track onto the wall frame. Add silicone first, and then put bumper block into the groove of wall frame.

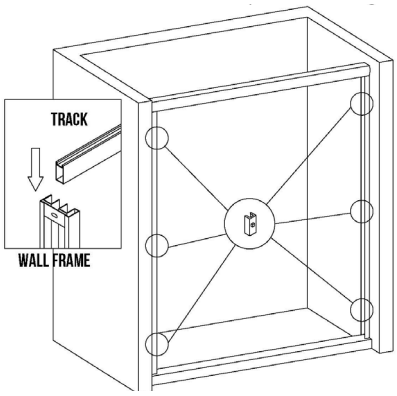

6

Install the wheel and door handle in place.

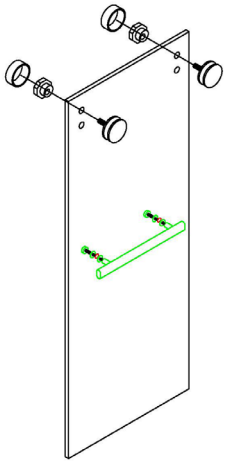

MERIDIEN HOUSE | 203 N. LEWIS ST. | LAGRANGE, GA 30240 USA
O: (706) 350-4300 F: (706) 350-4305 | WWW.MGROUPCORP.COM

MALMO SHOWER DOOR INSTALLATION INSTRUCTIONS

7

Install the floor guide. Any penetrations in the shower base or walls must be sealed and waterproofed with silicone.

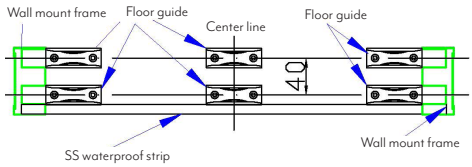

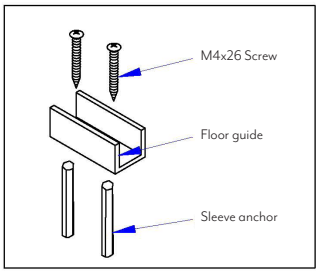

8

Aim two pieces of door glass at the floor guide and hang them on the upper track.

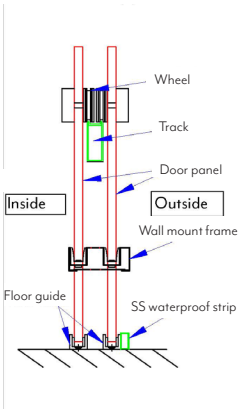

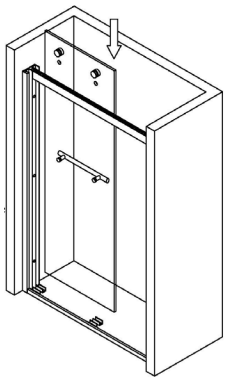

9

If the door glass is not vertical, the parts on the wheel can be adjusted vertically with a wrench.

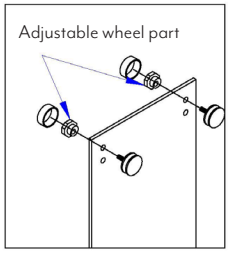

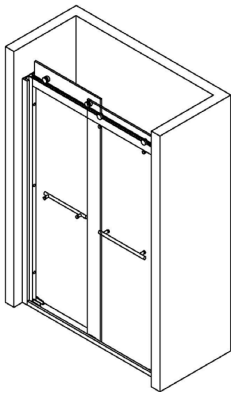

10

Install the anti-jumper on the door panels.

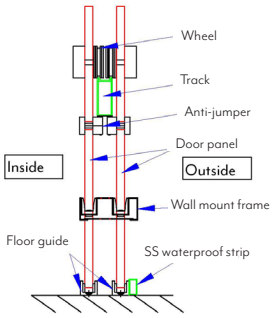

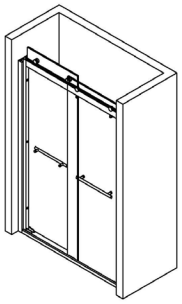

11

1. After installation, put the glass door in the guide rail chute and pulley so the door moves smoothly.
2. When the structure is solid, door should slide smoothly. Seal the connecting area of the fixed glass with silicone.
3. Allow 24 hours to dry. Ensure there's no shaking or swaying during this time.
4. Ensure the glass is clear of all rigid or metal contacts.

Both sides of the wall should be hit by the glass plastic seal.

24hrs

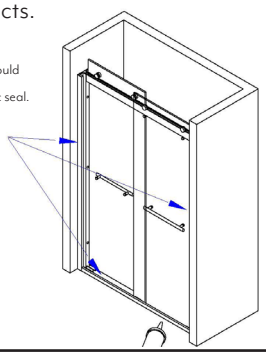

MERIDIEN HOUSE | 203 N. LEWIS ST. | LAGRANGE, GA 30240 USA
O: (706) 350-4300 F: (706) 350-4305 | WWW.MGROUPCORP.COM