44" WALNUT ACC VANITY

ML-002-A3

MSTONE™
a part of MGROUP™

TECHNICAL SPECIFICATIONS

TOTAL DIMENSIONS:	44"W x 25.5"D x 30"H
FINISH:	WALNUT VENEER - STAINED SIMILAR TO "7971K-12 UPTOWN WALNUT"
WOOD:	SOLID BIRCH BASE, STAINED WALNUT VENEER
LEGS:	SOLID BIRCH, STAINED WALNUT VENEER
SHELF:	NONE
CAP AT BASE:	5"H BRUSHED STAINLESS STEEL - FLUSH
GUIDES:	NONE
PULLS:	NONE
SINK:	SUPPLIED BY OTHERS - COORDINATE WITH STONE

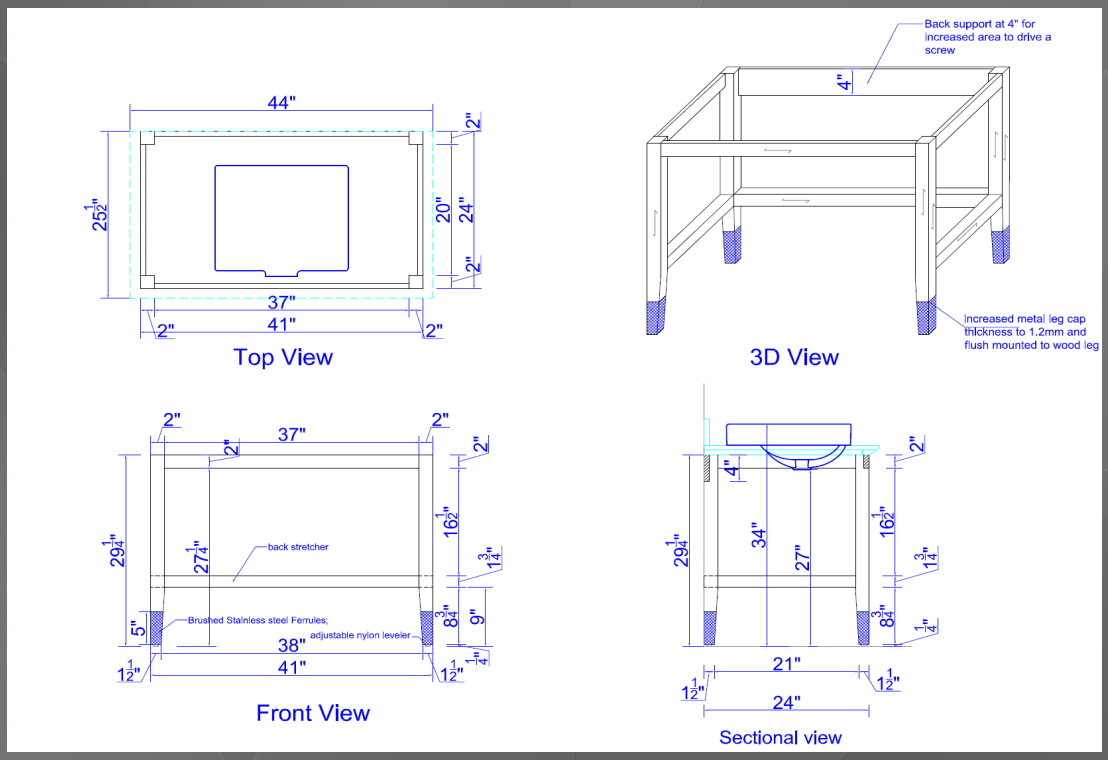

NON HANDED LAYOUT