RECOMMENDED TOOLS FOR INSTALLATION OF FRAMELESS ENCLOSURES:

- **Must have:**
  - Tape measure, good level, cordless drill, screwdriver with #2 and #3 bits, rubber mallet, razor blades, hacksaw, and file.
- **Should have:**
  - Hammer drill, step stool, 6-foot level, soft paintbrush, allen wrench set, various files, small solid wood block, plumb-bob, caulking gun, countersink set, spring clamps, miter saw, gloves, framing square, 100-foot extension cord, flat knife, suction cup, and diagonal cutters.
- **Could have:**
  - 2-foot level, 6-foot ladder, utility knife, automatic center punch, pry bar, snips, needlenose pliers, sander, and laser tool.

RECOMMENDED SUPPLIES FOR INSTALLATION OF FRAMELESS ENCLOSURES:

- Clear silicone (Cat. No. 33SC), duct tape, low transfer adhesive tape, plastic screw anchors (Cat. No. HR12X112), setting blocks (Cat. No. PSB040, PSB125, PSB156, PSB250, PSB375), spearpoint drill bits (Cat. No. 416 and 316), 3/16" (5mm) and 1/4" (6mm) masonry drill bits, tube wax (Cat. No. WS140), various high-speed drill bits, tapered wood shims (Cat. No. NWS9), an assortment of stainless steel screws, glass cleaner (Cat. No. 1973), and lint free paper towels (Cat. No. 1550).
- NOTE: It is always a good idea to bring extra polycarbonate seals, as field measurements and conditions may be subject to interpretation.

U-CHANNEL INSTALLATION INSTRUCTIONS

USE SILICONE SEALANT TO ADHERE AND SEAL THE GLASS IN U CHANNEL:

- **Overview:**
  - Siliconing glass into the U channel is a two-step process. The first step is to achieve structural strength and involves applying a bead of silicone inside the bottom of the U channel. This is done to the side of the U channel (if the U channel is used vertically) and the bottom U channel. The second step is to provide waterproofing. This requires a very small cap bead of clear silicone to be run around the entire perimeter of the U channel edge where it meets the glass (both inside and out). Also, a small bead of silicone should be run where the base of the U channel meets the tile or marble (both inside and out) and any open areas at the end of the U channel. After your glass is set and aligned, you will have to select your cleanup method (explained below) before proceeding to the application of the silicone sealant.
- **Silicone Cleanup Methods:**
  - No matter how carefully you set your glass in the U channel, a certain amount of silicone will flow out between the glass and the U channel. There are two methods of addressing this:

1. **The Preventive Method:**
   After your glass is aligned, apply Blue Low Adhesive Transfer Tape to the glass approximately 1/16" (1.5mm) to 3/32" (2mm) above the metal sight line. Then using the same tape, apply it to the top leg of the U channel approximately 1/16" (1.5mm) to 3/32" (2mm) back from the gap. This will provide an even and attractive bead width when your cap bead is tooled. Now remove the glass and apply the structural bead of silicone to the bottom of the U channel. Reset the glass and align it. Wipe off any excess silicone flow from the seam. It is now time to apply your silicone cap bead and tool it. After tooling, immediately remove the tape.
2. **The Corrective Method:**
   After your glass is set in the U channel and the excess silicone has flowed out, let it set for 30 to 60 minutes. Then use a single-edge razor blade to trim and scrape the excess silicone away. Now you can run your cap bead. Its appearance and bead width will be determined by your application skills.

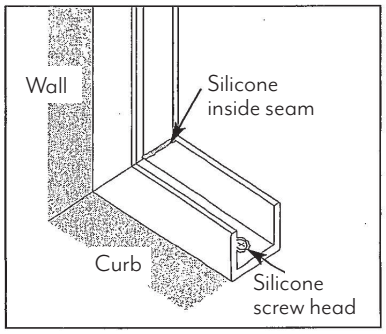

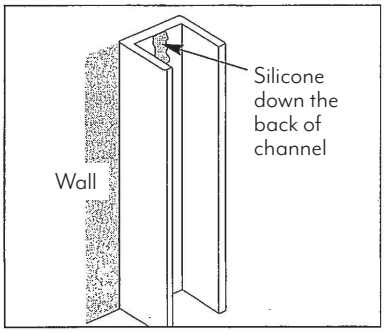

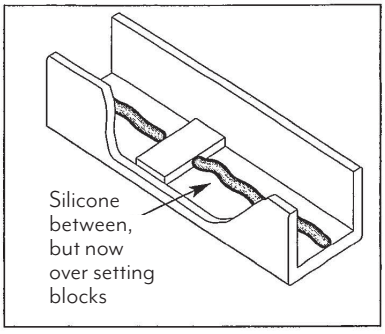

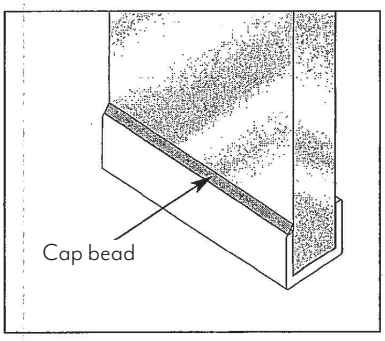

MERIDIEN HOUSE | 203 N. LEWIS ST. | LAGRANGE, GA 30240 USA
O: (706) 350-4300 F: (706) 350-4305 | WWW.MGROUPCORP.COM